REVISION HISTORY				
ZONE	REV	DESCRIPTION	DATE	APPROVED
ALL	A	BLKHD FLANGE, ADD MNT CLAMP, FDTHRU PLATE	2003-02-06	V.L. GASHO

NOTES:
1. MODIFICATIONS TO OPT FOR AEC ANTENNA.
   A) MOVE BASE WITH RESPECT TO TUBE 100 MM AFT.
   B) INCREASE LENGTH OF SHUTTER/SOLAR FILTER MOUNT TUBE BY 200 MM.
   C) REPLACE CAMERA COVER WITH OLDER STYLE COVER.
2. NRAO SUPPLIES BULKHEAD MOUNTING CLAMP AND AEC SUPPLIES BULKHEAD AND RECEIVER CABIN CABLE FEEDTHROUGH PLATE.
3. NRAO WILL SUPPLY SHIELDED CABLE ASSY. AND FEEDTHOUGHS.

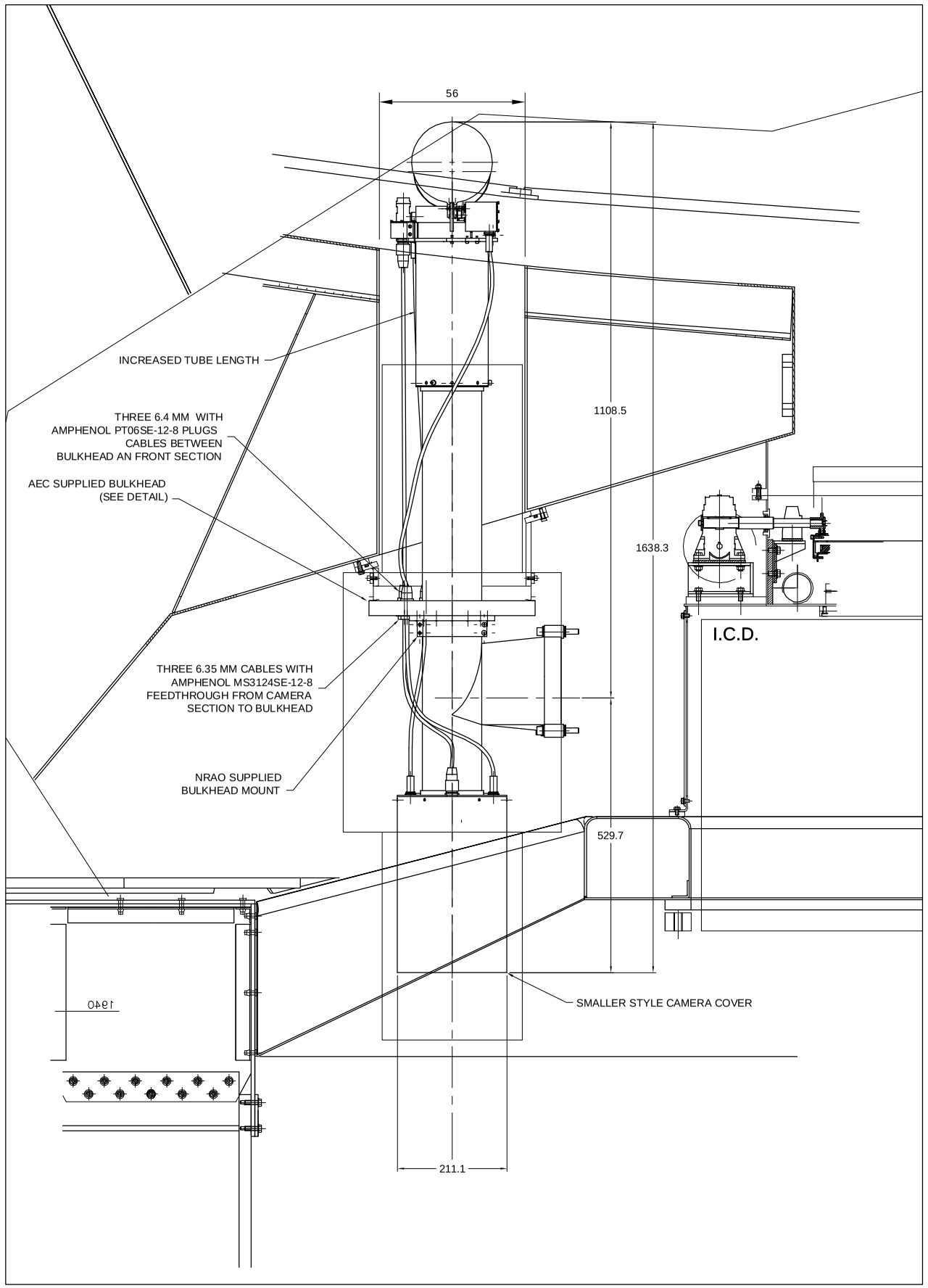

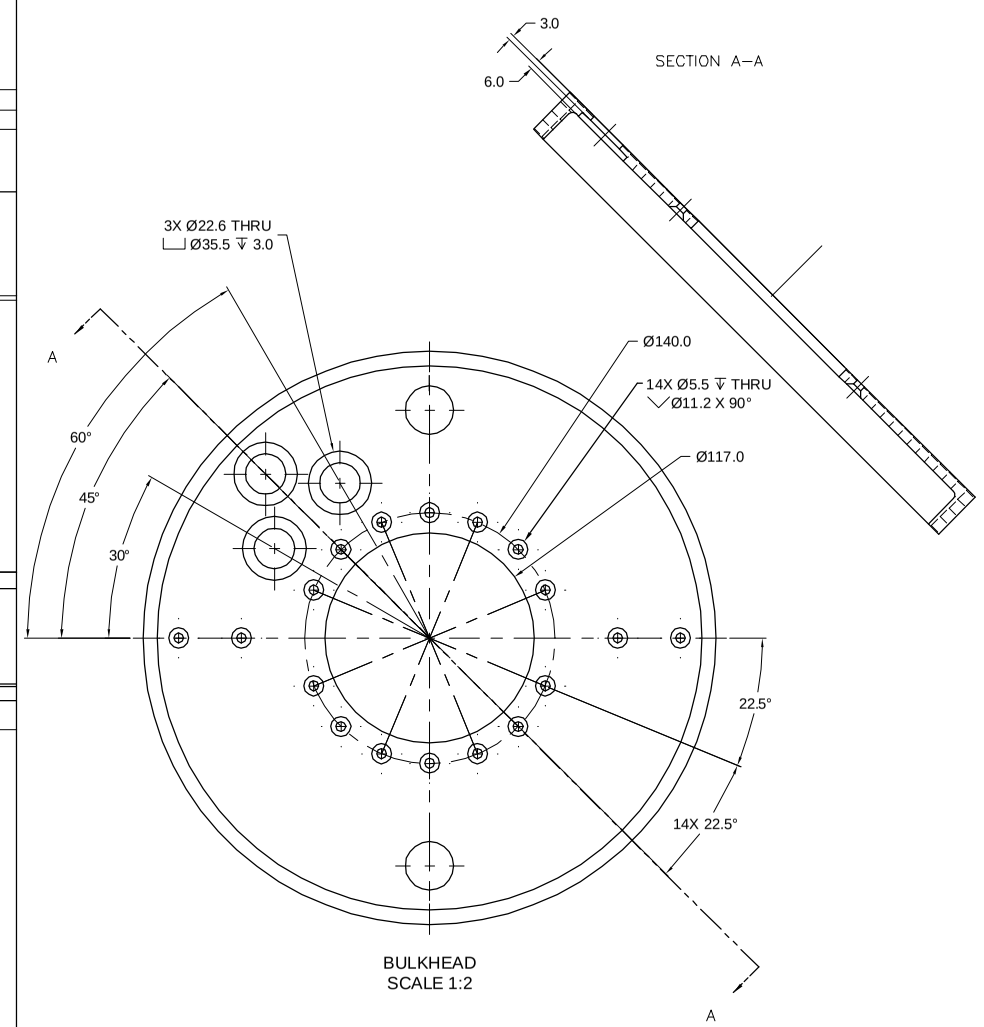

BULKHEAD
SCALE 1:2

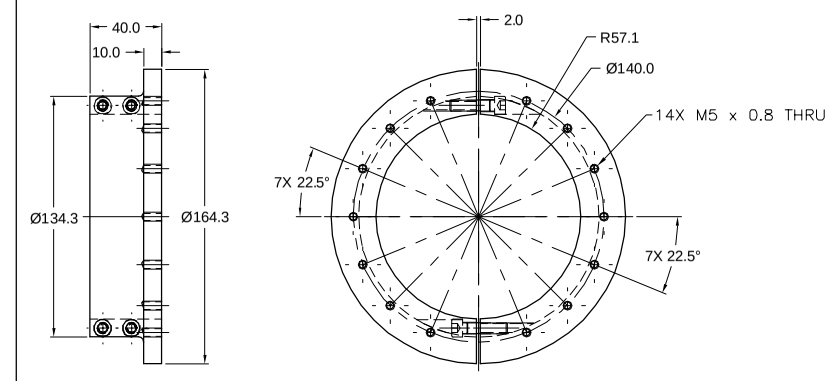

BULKHEAD MOUNTING CLAMP
SCALE 1:2

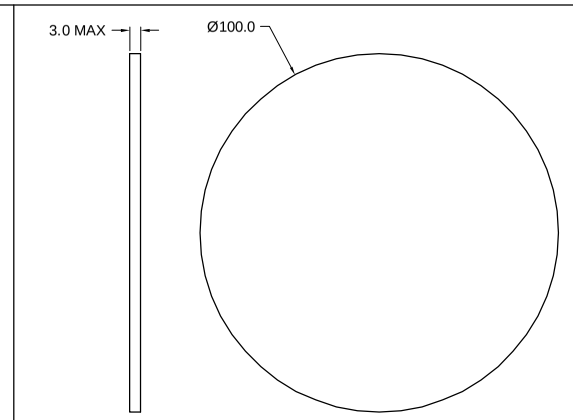

RECEIVER CABIN CABLE
FEEDTHROUGH PLATE
SCALE 1:1

METRIC
THIRD ANGLE PROJECTION

UNLESS OTHERWISE SPECIFIED DIMENSIONS ARE IN MILLIMETERS. TOLERANCES ARE:
DECIMALS ANGLES
X ± 1 ± 1°
.X ± 0.3 ± 0.5°
.XX ± 0.03
DO NOT SCALE DRAWING

TREATMENT
FINISH AS NOTED
SIMILAR TO
SPECIAL MARKING SYMBOLS

CONTRACT NO.

APPROVALS	DATE
DRAWN V.L. GASHO	2003-01-30
CHECKED	
ENGR.	
SYSTEMS GROUP	

NATIONAL RADIO ASTRONOMY OBSERVATORY
operated by ASSOCIATED UNIVERSITIES INC. in agreement with THE NATIONAL SCIENCE FOUNDATION

TITLE
OPT III,
COFIGURATION FOR AEC ANTENNA

ALMA-TUCSON
949 N. CHERRY AVE.
CAMPUS BLDG. 65
TUCSON, AZ 85712

SIZE	CAGE CODE	DWG NO.	REV.
D		ALMA03011AX0037	A

SCALE 1:5,1:2,1:1 | CALC. WT. | ACT. WT. | SHEET 1/1