ALMA Front End Amplitude Calibration Device Design and Measured Performances

Joan Manel Casalta, Albert Molins, Martí Bassas,
Manuel Canchado, Eva Creus, Albert Tomàs.

NTE S.A., Can Malé, s/n. 08186 Llissà d'Amunt, Barcelona, Spain

ABSTRACT

This paper summarizes the main aspects of the design and qualification test results of the ALMA Amplitude Calibration Device Robotic Arm (ACD). The design aspects of the ACD, including a detailed description of the components selected to achieve the expected performances are presented in the first part of the paper. Also the system performances results measured in the first prototype units are summarized at the last part of the paper.

Keywords: ALMA, Front-End, ACD, Robotic Arm, Calibration Loads.

1. INTRODUCTION

The Atacama Large Millimeter Array (ALMA) is an international astronomy facility, built in collaboration between Europe, Japan and North America in cooperation with the Republic of Chile, consisted of a giant array of 12-m submillimetre quality antennas that will be installed at Llano Chajnantor in Chile (aprox. 5.000 m elevation) [1].

The ALMA Amplitude Calibration Device (ACD) is a robotic arm that places calibrated loads in front of the ALMA antennas receivers that constitute the antenna front-end. NTE is in charge of the design, manufacture and test of seven robotic arm prototypes under European Southern Observatory (ESO) contract. ESO is responsible of the contract management and calibrated loads design and implementation.

The ACD is a scara-like robot, able to place one Ambient Load or one Hot Load or a Solar Filter in front of each receiver (ALMA Front-End has up to ten bands receivers), plus a slide table in charge of placing the Quarter Wave Plate (QWP) in front of the band 7 receiver.

The main required specifications of the robotic arm are:

- External dimensions: 600 mm x 750 mm.
- Linear repeatability of 0.1 mm.
- Angular repeatability ± 0.5 mrad.
- Angular stability ± 0.2 mrad.
- Linear misalignment ± 1 mm.
- Angular misalignment: ± 2 mrad.
- Calibration Time better than 9 sec.
- Total mass around 75 Kg.
- Functional Temperature: 10ºC to 25ºC.
- Thermal stability better than +/- 2ºC.
- Temperature variation better than 2ºC/hr.
- MTBF equivalent to 500.000 calibration cycles.

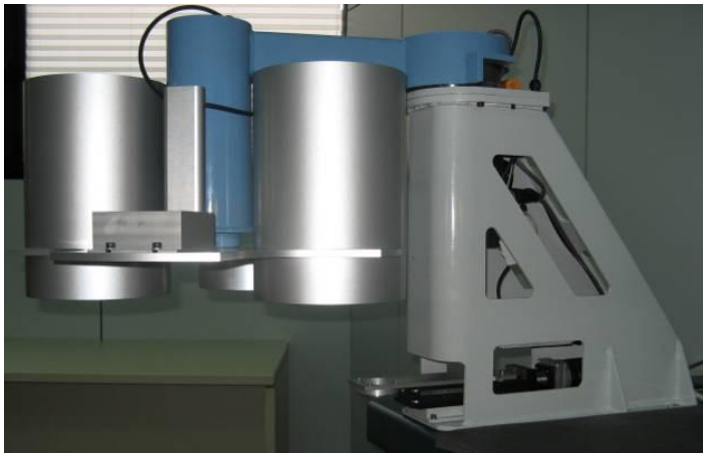

Figure 1: ALMA Amplitude Calibration Device Prototype

Advanced Optical and Mechanical Technologies in Telescopes and Instrumentation, edited by Eli Atad-Ettedgui, Dietrich Lemke, Proc. of SPIE Vol. 7018, 701838, (2008) · 0277-786X/08/$18 · doi: 10.1117/12.788756

2. ALMA ACD DESIGN OVERVIEW

The following section summarizes the design of the ALMA Amplitude Calibration Device, including the Robotic Arm design, Analysis performed and the Electronics and Control system.

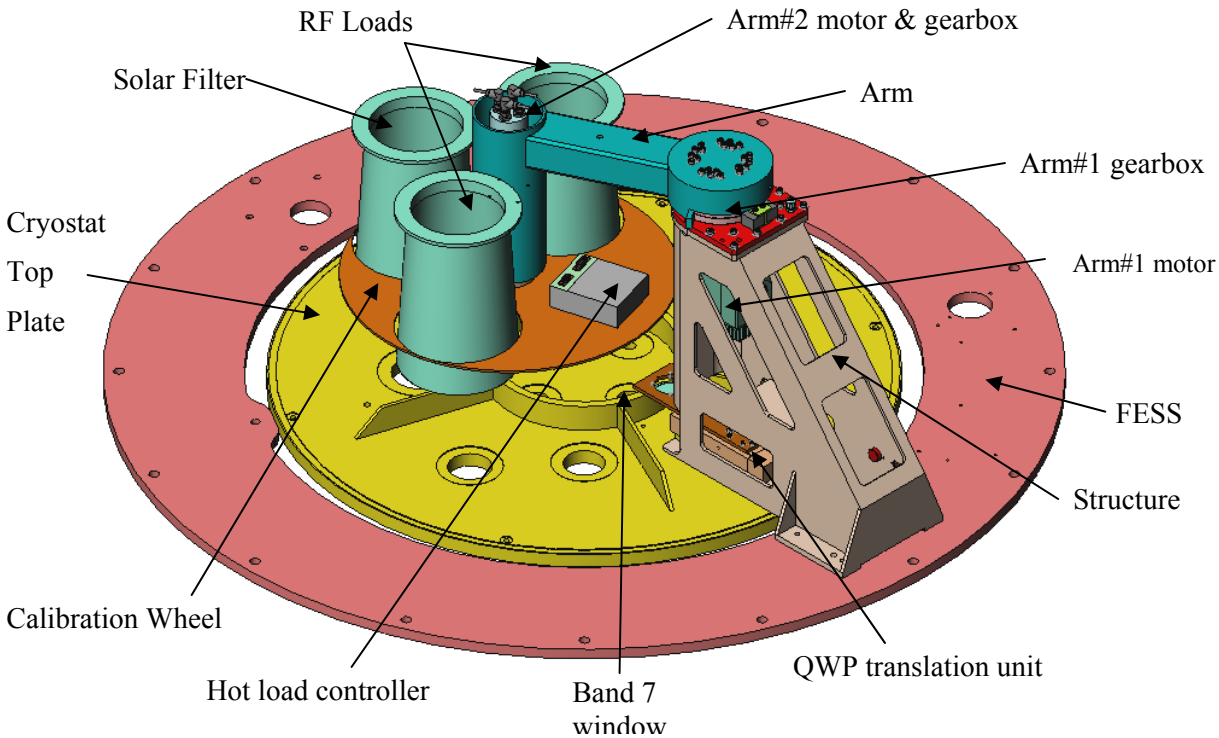

Figure 2: ALMA ACD Design

2.1. Robotic Arm

The robotic arm places the Calibration Wheel in front of the selected band. It is composed by the following elements:

2.1.1. Fixed Structure

The Structure interfaces with the Front End Support Structure (FESS) and contains and stands the QWP translation unit, the Arm#1's motor and gearbox and the connectors interfacing with the electronics. It is built in steel plates welded and windows are provided to save mass and to allow access to the internal parts.

The structural analysis performed on the design, showed deformations of 0.07mm for pure vertical load and 0.13mm for pure horizontal load. These deformations are relevant to achieve the Angular and Linear Misalignment specified.

2.1.2. Arm#1's Motor and Gearbox

The ALMA ACD is built using off-the-shelf products, in addition to the mechanical structure parts.

The motor #1, model MAC800-D4 from JVL integrates the servo drive and it is commanded through a CAN bus. A cycloidal gearbox providing a high torsion stiffness, low backlash and high bending rigidity (SF-T-140-139 from SERVOTAK) is assembled with the Motor#1.

Mechanical end stops are provided to limit the range of motion of the arm and a Baumer IFRM05 inductive proximity switch is installed to be used as a "rough" zero position reference switch.

2.1.3. Arm

It is fixed to the Arm#1's gearbox output shaft and support the Arm#2's motor and gearbox. It is built in welded steel plates and commercial tubes.

The structural analysis shows deformations 0.55mm for pure vertical load and 0.16mm for pure horizontal load.

2.1.4. Arm#2's Motor and Gearbox

The Arm#2 also uses off-the shelf products: The motor MAC140-A1 from JVLwith the expansion module MAC00-FC4 for CANBus communication and the gearbox model SF-T-80-97
The following table summarizes the performances of the set motor/gearbox for both arms and compares them with the needed figure.

Parameter	Arm#1		Arm#2	
	Actual	Required	Actual	Required
Output Torque (Nm)	268	110.8	31	10.1
Max. Velocity (rad/s)	2.23	1.4	4.3	1.4
Resolution (µrad)	6	192	15	571
Repeatability, including backlash and torsional deformation (arcmin)	2.45	6.6	2.82	19

2.1.5. Quarter Wave Plate Translation Unit

This translation unit positions the Quarter Wave Plate of the Robotic Arm in front of the Band 7. This subsystem can be installed or removed in the ALMA ACD by means of interfacing pins and cabling pre-installation in the system.
A combination of a precision linear stage from THK plus a MAC50-A1 motor (with the expansion module MAC00-FC4) from JVL has been selected.

2.2. ACD Analysis

The following analyses have been performed during the ALMA Amplitude Calibration Device detailed design:

- Structural Analysis: basically, it covers the structural deflections of the robotic arm structure taking into account the gearboxes stiffness to demonstrate the fulfilment of the accuracy requirements. It also covers the stresses on the structure to demonstrate the structural integrity of the system with respect the applicable loads (gravity, impact case, earthquake, survival, transportation). And finally it also covers the modal analysis results to demonstrate the structure frequency requirements.

According to the conclusion of the structural analysis, the Amplitude Calibration Device is designed to support all the load cases with enough safety margins.

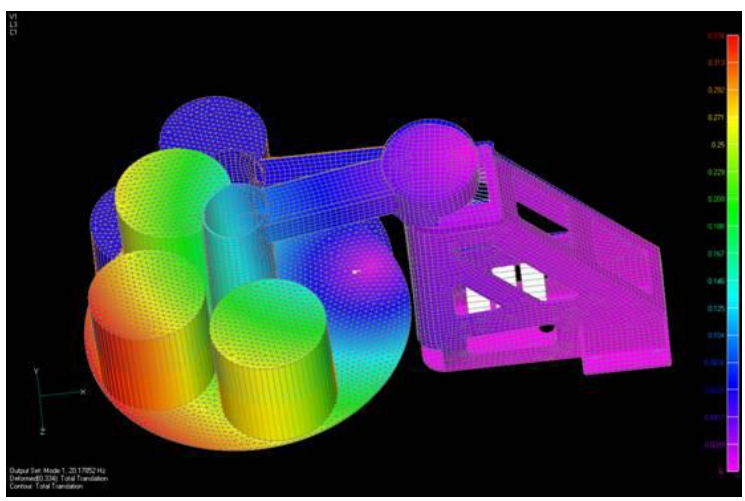

Figure 3: ALMA ACD First Modal Frequency simulations

- Hazard Analysis: to identify the hazards associated to such equipment, analyse the controls proposed in the design (that is, the measures to prevent hazardous situations and minimize the hazard effects), and outline how the hazard identification, and the hazard controls adequacy, were going to be verified.

- High Altitude Analysis. The ALMA site will be located at an altitude of 5200 meters above sea level. At this altitude the effects of the lower dielectric strength and of the reduced cooling capacity of air are taken into account.
Moreover, materials have been be chosen meticulously in order to assure their durability during the lifetime of the calibration device.

- RAMS analysis:

According to the customer requirements a minimum MTBF (mean time between failures), equivalent to 500000 calibration cycles or to 1250 hours of the electromechanical parts continuous operation is defined and 42000 hours, almost 5 years for the electronic components.
Electronic and electromechanical components have been chosen to fulfill this requirement obtaining a final system MTBF of:

MTBF Electromechanical: 77689 hours
MTBF Electrical: 166667 hours
MTBF System: 52989 hours

Calculated using the following formula and the contribution of each subsystem:

$$\frac{1}{MTBF_{system}} = \sum_i \frac{1}{MTBF_i}$$

2.3. Electronic Unit and Control System

The electronics and control software are installed inside a dedicated cabinet. It is placed at the bottom of the FESS and interconnected by signal and power cables to the Robotic Arm and by means of CAN-Bus with the Antenna Control System.

The Control System is based on the AMBSI2 board, interfacing with the ALMA Monitor and Control Bus, AMB, and a R-U03CD board, from Rigel Corporation, interfacing with the motors. Both boards are interconnected through a synchronous serial channel, SPI compatible. The AMBSI2 routes the packets from/to the AMB bus to the R-U03CD, and takes care to decode and command the motors driving the robot and the sliding table, and acquire the position, temperature and other relevant information through a secondary CAN bus.

The Calibration Wheel is connected through a CANOpen compatible controller for Hot Loads heating and temperature probes reading.

AC/DC power supplies are accommodated to power the Calibration device from the 230Vac power supply to + 5 Vdc powering the AMB and the R-U03CD boards and +24 Vdc powering the MAC50, MAC140 and the control of the MAC800. Transient and surge protection devices are installed in the mains power supply lines in order to fulfill the voltage surge requirements

Control software is embedded in the R-U03CD board in order to provide:

- Control functions to initialize system and place Loads / Filter /QWP in front of the selected band.
- Monitoring functions to obtain present Load/Filter/QWP position, temperature readings or access to motor registers information.

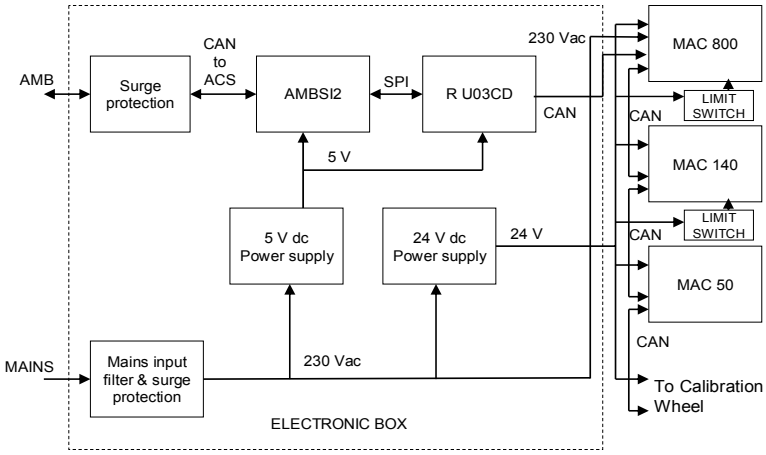

Figure 4: ALMA ACD Control System

3. ALMA ACD PERFORMANCE TEST RESULTS

3.1. TEST SET-UP

The ALMA Amplitud Calibration Unit is installed for testing in a Test Stand. The Test Stand allows rotation to check system performances simulating different antenna orientation. A Calibration Wheel dummy is being used to simulate maximum robotic arm load weight (18 Kg) and measure the reached position of each Calibration Load / Solar Filter.

Figure 5. ACD in the Test Stand

The overall position misalignment and the position repeatability are measured using a portable 3D machine. A reference point is taken at the ACD structure interface with FESS and the relative position of the centre of each load is measured using the external cylinder and a machined surface.

3.2. TEST RESULTS

3.2.1. Overall Misalignment and Repeatability

The following tables summarize the performances measured on the first ACD manufactured units.

Linear Repeatability (in mm): The Load/ Filter is placed over the selected band and the operation repeated 5 times. The presented values are the maximum deviations for different load over different bands at 0º and 90º of antenna elevation.

	Hot Load over Band 1		Solar Filter over Band 7		QWP over Band 7	
	At 0º	At 90º	At 0º	At 90º	At 0º	At 90º
X	0,08	0,05	0,02	0,03	0,00	0,07
Y	0,10	0,07	0,02	0,01	0,01	0,03
Z	0,03	0,04	0,02	0,02	0,04	0,03

Linear Missalignment (in mm): corresponds to the deviation from the structure fixation interface to the Load/Filter position. The minimum and maximum deviations are presented according to measurements at 0º and 90º antenna elevation.

	Hot Load over Band 1		Solar Filter over Band 7		QWP over Band 7	
	Max deviation	Min deviation	Max deviation	Min deviation	Max deviation	Min deviation
X	0,36	-0,37	0,43	-0,43	0,05	-0,02
Y	0,57	-0,56	0,42	-0,42	0,12	-0,58
Z	0,26	-0,44	-0,05	-0,20	0,48	0,42

Angular Misalignment and repeatability (in mrad): the absolute angular deviation w.r.t. the interface and the angular repeatability is summarized in the following table. Mechanical parts flexion and plays gives a maximum angular deviation close to 2 mrad as expected from the design analysis performed. Repeatability is of one order of magnitude bellow.

	Hot Load over Band 1			Solar Filter over Band 7			QWP over Band		
	Max deviation	Min deviation	Repeat.	Max deviation	Min deviation	Repeat.	Max deviation	Min deviation	Repeat.
At 0º	1,19	0,97	0,21	1,39	1,28	0,11	0,32	0,20	0,12
At 90º	1,89	1,74	0,14	1,79	1,73	0,06	0,19	0,14	0,05

3.2.2. Other Robotic Arm Performances

The total Calibration Time (time to place a Hot and Ambient Load in the selected band position and return to the Park Position) is being measured for the different bands and using different control modes. The mean time for all bands is around 6 sec, far from the 9 sec specified and the Calibration time reduce to 5.5 sec. for the Solar Filter and 4.4 sec for the QWP.

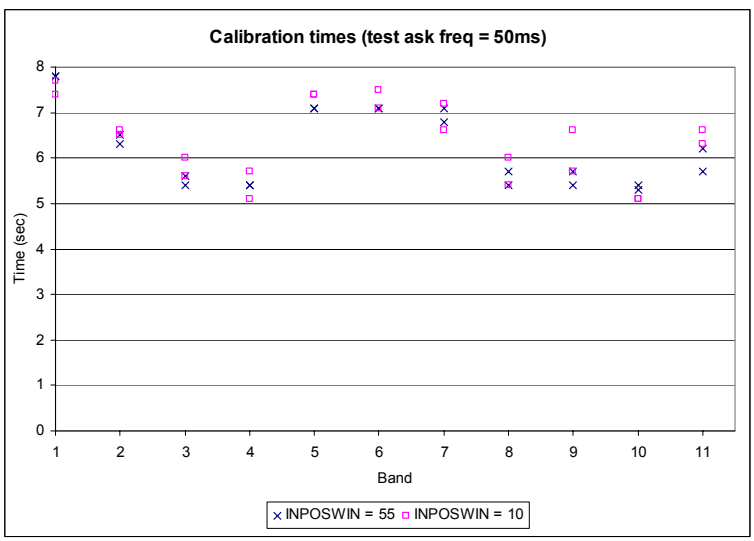

Figure 6. Hot and Ambient Load Calibration Cycle time position

On the other hand the measured average power consumption is bellow 200 VA but the peak power consumption during calibration including all load mass increases to 900 VA.

A functional test has been performed at 10ºC and 25ºC to check system thermal stability is better than +/- 2ºC and temperature variation better than 2ºC/hr.

The performances have also been verified before and after a life test. More than 10.000 cycles has been performed in one of the ACD prototypes and the performances are maintained after the test.

4. SUMMARY

The Amplitude Calibration Device first prototype units have been designed, manufactured and successfully tested according to the provided specifications. The performances of the system are far within the specifications and the performance repeatability between different units demonstrated.

According to the qualification of these prototype units, the design of the Amplitude calibration device is well prepared to proceed with the production of a series of a total of 63 units.

Main lessons learned are:

- The time devoted during design to close interfaces and verify performances by analysis, has reduced to the minimum the integration problems and later on refurbishment of critical parts.
- Special care shall be taken in hardware electrical configuration to achieve EMC performances.
- Dimensional verifications of critical parts and interfaces, helps to identify problems in final system performances before integration.
- Complex software interfaces have to be managed and controlled through a clear Interface Control Document.

5. ACKNOWLEDGEMENTS

The ALMA ACD has been designed, manufactured and tested by NTE S.A under ESO contract. At the close-out of this paper, NTE has completed the manufacturing and testing of three units. The final testing of four additional units is expected for the following weeks before to proceed with the serial production of 63 units to be completed by beginning of 2011.

We would like to thank all the people involved in the project for design a simple system using off-the shelf components but obtaining outstanding performances better than specified and especially to ESO team for the contributions during the Final Design Review and the management during all project phases.

6. REFERENCES

1. Anthony J. Beasley; “The Atacama Large Millimeter/Submillimeter Array”. Proc. of SPIE’s 2008 Astronomical Telescopes and Instrumentation, Conference 7012.
2. Hans Rykaczewski, “Organization and management of the ALMA project”. Proc. of SPIE’s 2008 Astronomical Telescopes and Instrumentation, Conference 7017.
3. Christoph Haupt, Richard Sramek, Koh-Ichiro Morita “System Engineering in the ALMA Project”, Proc. Of SPIE’s 2006 Astronomical Telescopes and Instrumentation, Vol. 6271