REVISIONS					
REVISION	MADE BY	DESCRIPTION	ZONE	DATE	APPROVED

RcvrArray18_26

RECEIVER

GBT EQUIPMENT ROOM

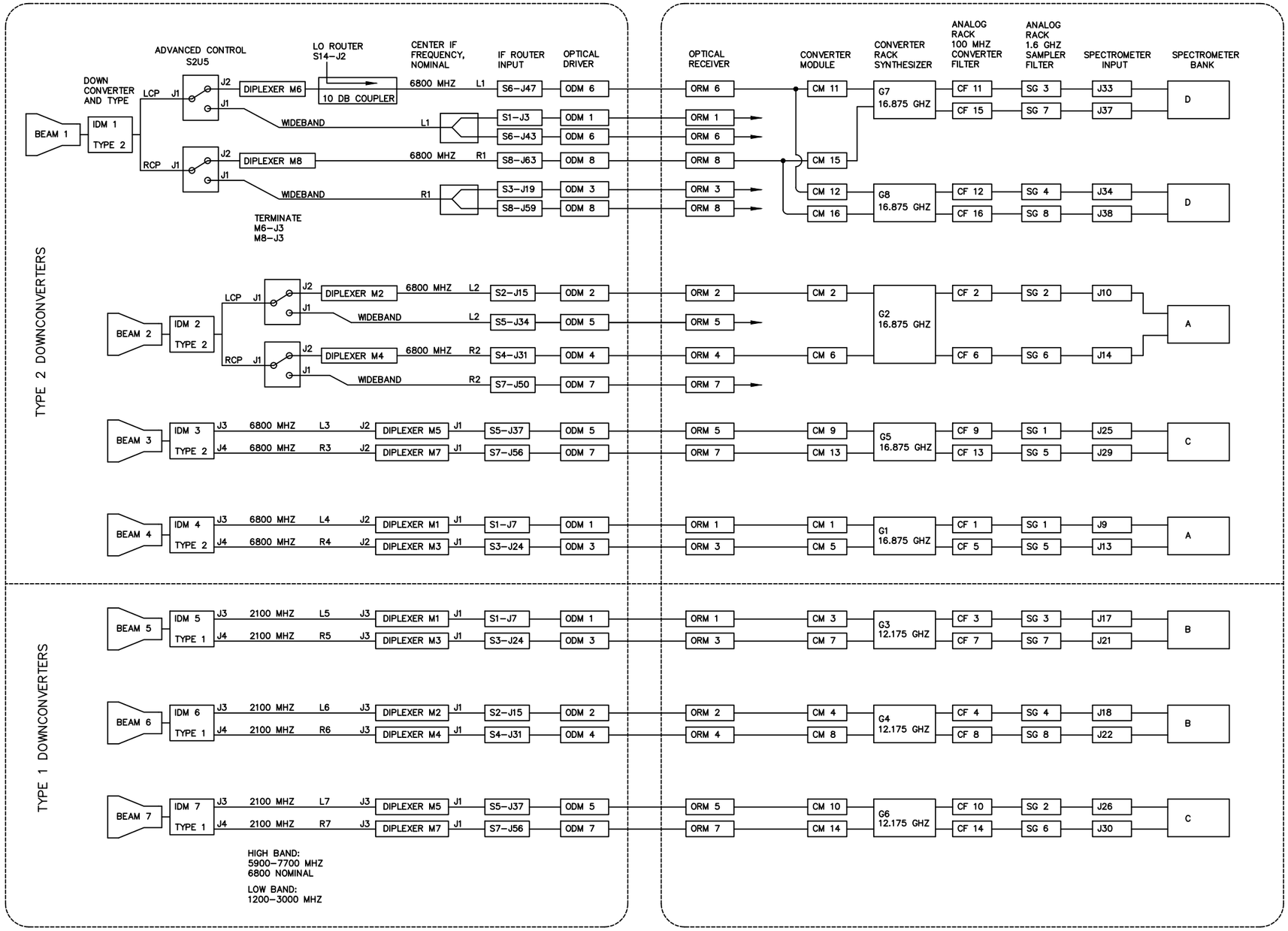

FEED ARRANGEMENT

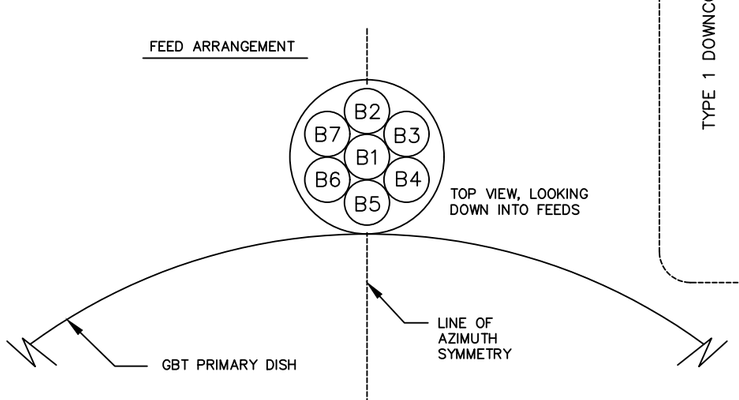

NATIONAL RADIO ASTRONOMY OBSERVATORY P.O. BOX 2, GREEN BANK, WEST VIRGINIA, 24944			TOLERANCES UNLESS OTHERWISE SPECIFIED ANGULAR ±0°30' FRACTIONAL ±1/64 2 PLACE DECIMAL ±.01 3 PLACE DECIMAL ±.005 DIMENSIONS ARE IN INCHES
PROJECT/TITLE: KFPA RECEIVER CONNECTIVITY			
DESIGNED	DRAWN: SIMON	CHECKED	DATE: 1/2/2008
SCALE	MATERIAL	FINISH	DRAWING NO.
FILE	SHEET	REVISION	C02920K004