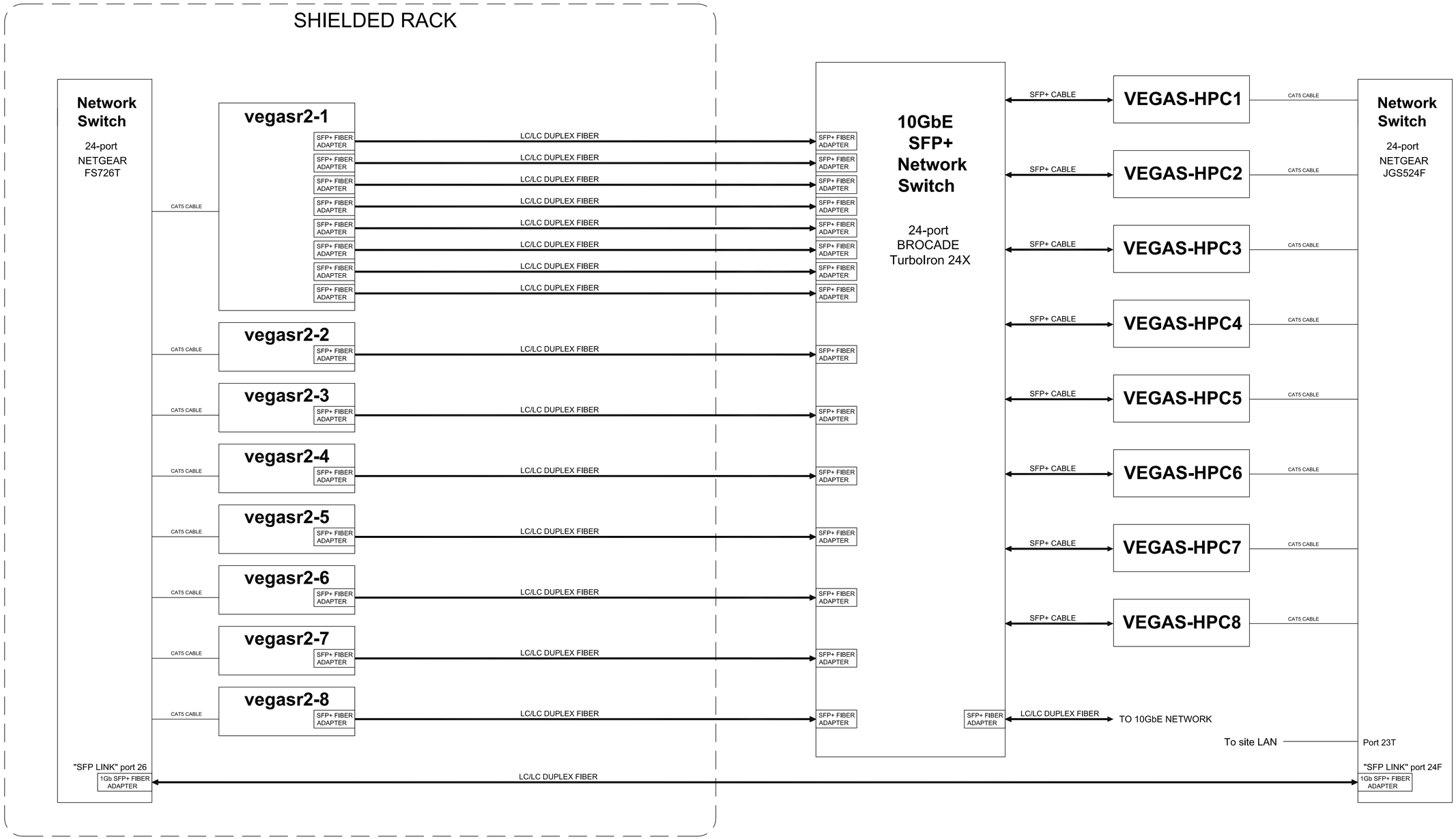

NOTES:
1. SFP+ FIBER ADAPTERS ARE FINISAR P/N FTLX8571D3BCL
2. 1Gb SFP+ FIBER ADAPTERS ARE ADDON P/N Y74900

DRAFT!

NATIONAL RADIO ASTRONOMY OBSERVATORY
P.O. BOX 2, GREEN BANK, WEST VIRGINIA, 24944

PROJECT/TITLE	VEGAS BLOCK DIAGRAM		
DESIGNED	MANY	DRAWN	JMR
CHECKED		DATE	12/18/12
SCALE		MATERIAL	
FINISH		DRAWING NO.	B35215K003
FILE	\ARCHIVE\35215\K003	SHEET	1 OF 4
REVISION	–		

TOLERANCES UNLESS OTHERWISE SPECIFIED
ANGULAR ±0°30'
FRACTIONAL ±1/64
2 PLACE DECIMAL ±.01
3 PLACE DECIMAL ±.005
DIMENSIONS ARE IN INCHES

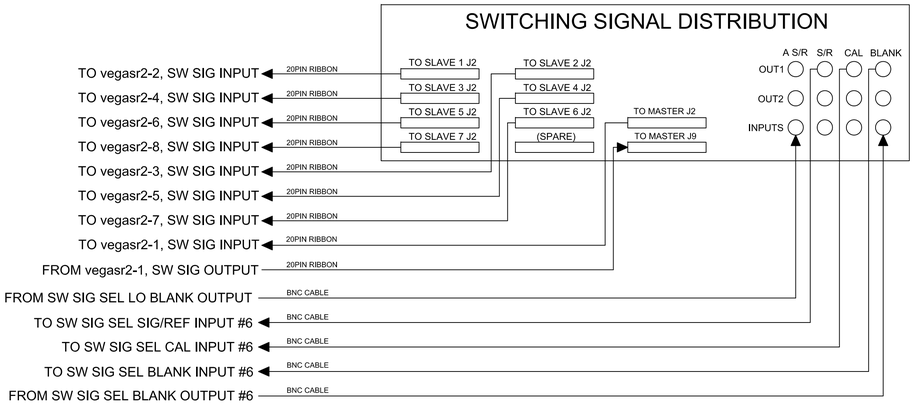

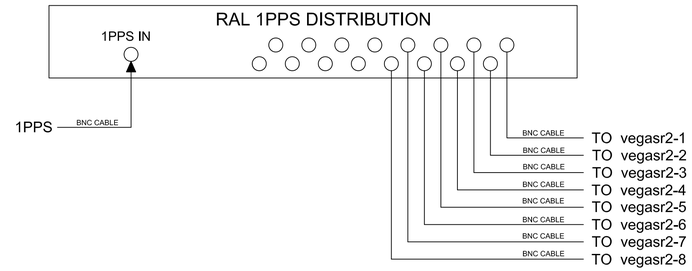

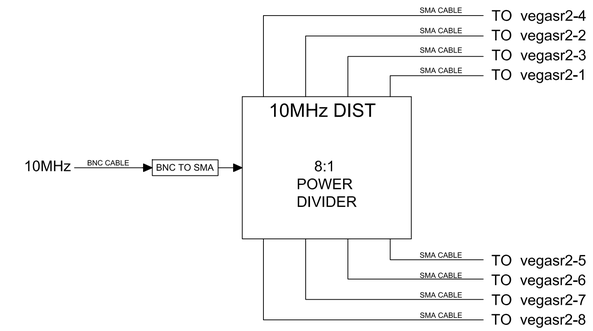

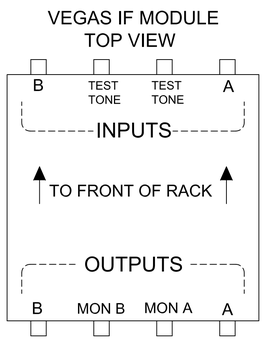

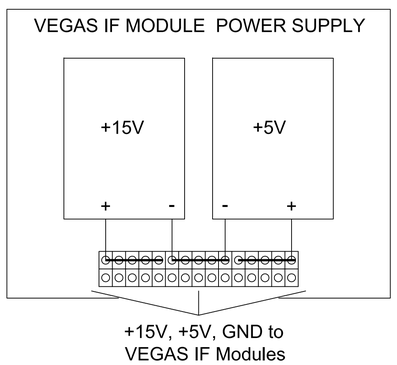

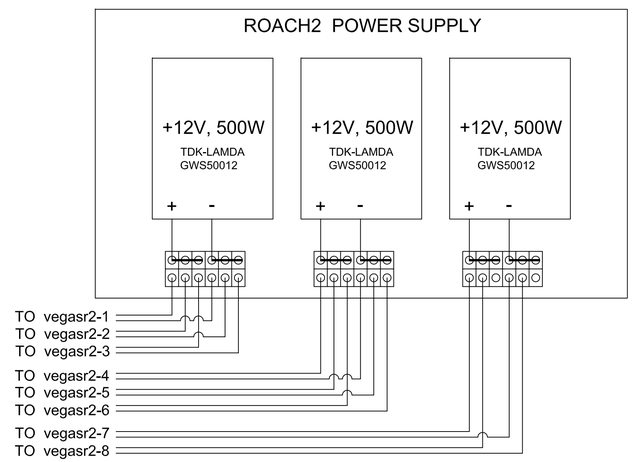

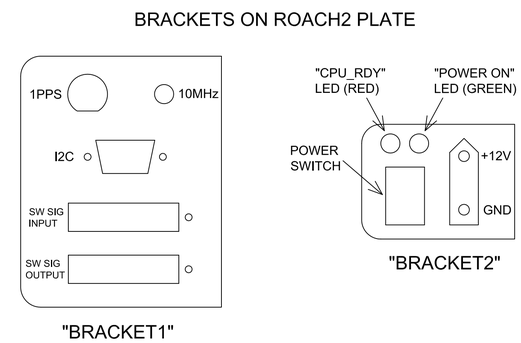

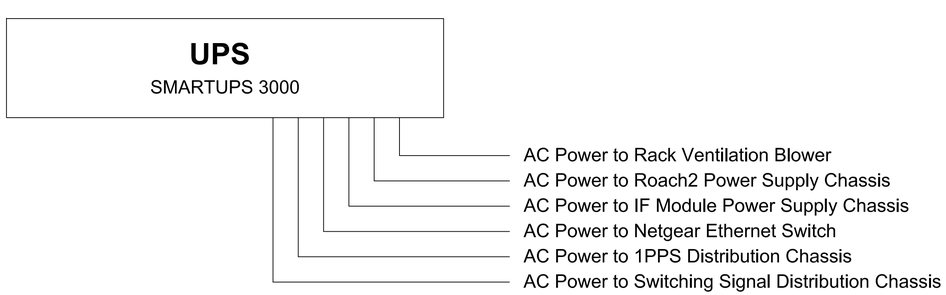

NOTES:
1. 8:1 POWER DIVIDER IS MERRIMAC P/N PDM-80-275
2. 20PIN RIBBON CABLES: DWG B35215S002, SH 3,4, & 5
3. SWITCHING SIGNAL BNC CABLES: DWG B35215S002, SH 13
4. 10MHZ CABLES: DWG B35215S002, SH 9
5. 1PPS CABLES: DWG B35215S002, SH 10
6. IF MODULE POWER CABLES: DWG B35215S002, SH 8
7. ROACH2 POWER CABLES: DWG B35215S002, SH 1

DRAFT!

NATIONAL RADIO ASTRONOMY OBSERVATORY
P.O. BOX 2, GREEN BANK, WEST VIRGINIA, 24944

PROJECT/TITLE	VEGAS BLOCK DIAGRAM		
DESIGNED MANY	DRAWN JMR	CHECKED	
SCALE	MATERIAL	FINISH	
FILE \ARCHIVE\35215\K003	SHEET 2 OF 4	REVISION –	

TOLERANCES UNLESS OTHERWISE SPECIFIED
ANGULAR ±0°30'
FRACTIONAL ±1/64
2 PLACE DECIMAL ±.01
3 PLACE DECIMAL ±.005
DIMENSIONS ARE IN INCHES

DATE 12/18/12
DRAWING NO. B35215K003

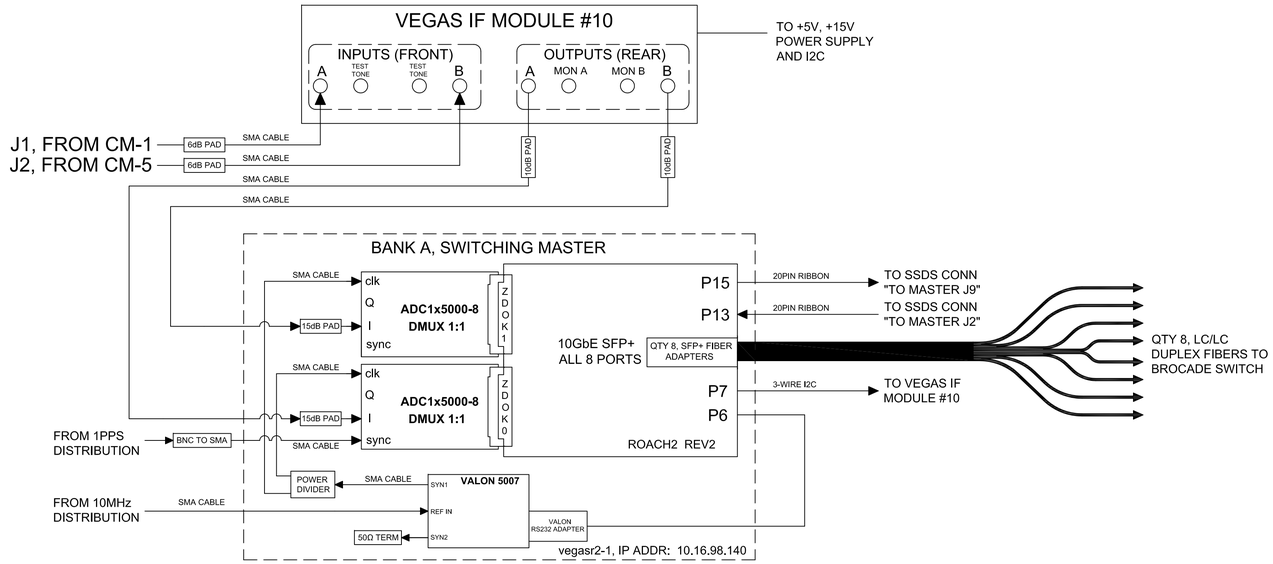

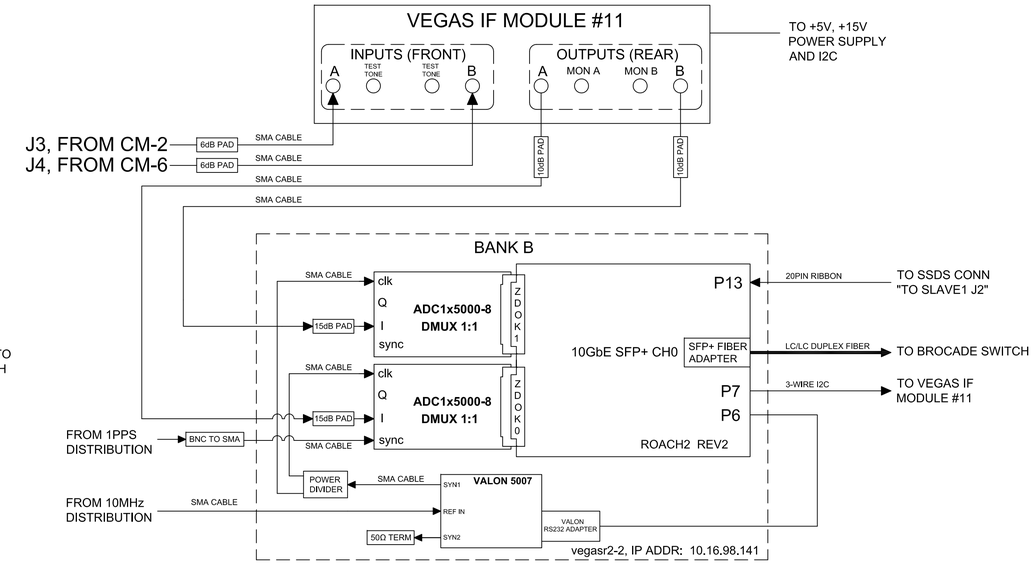

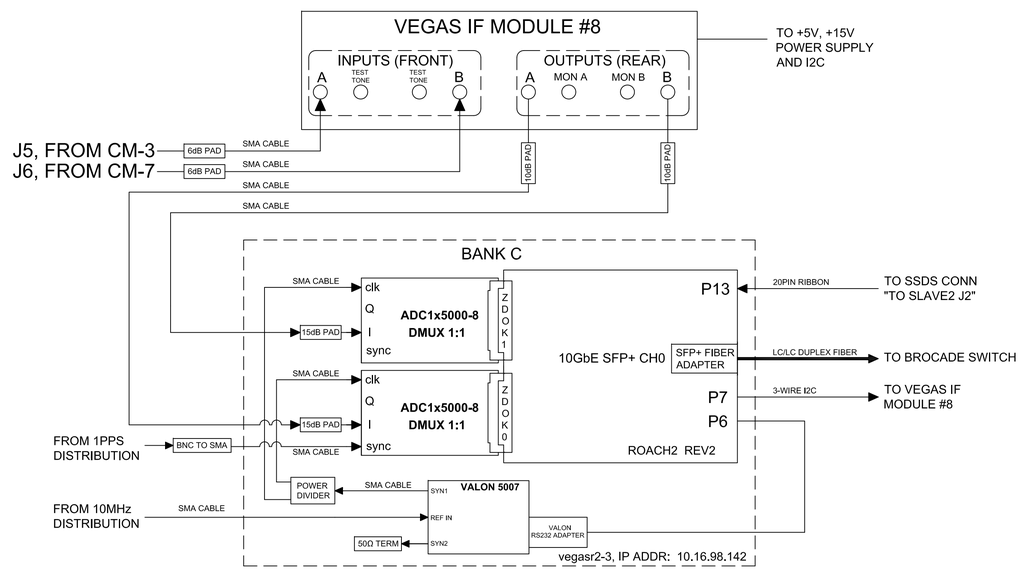

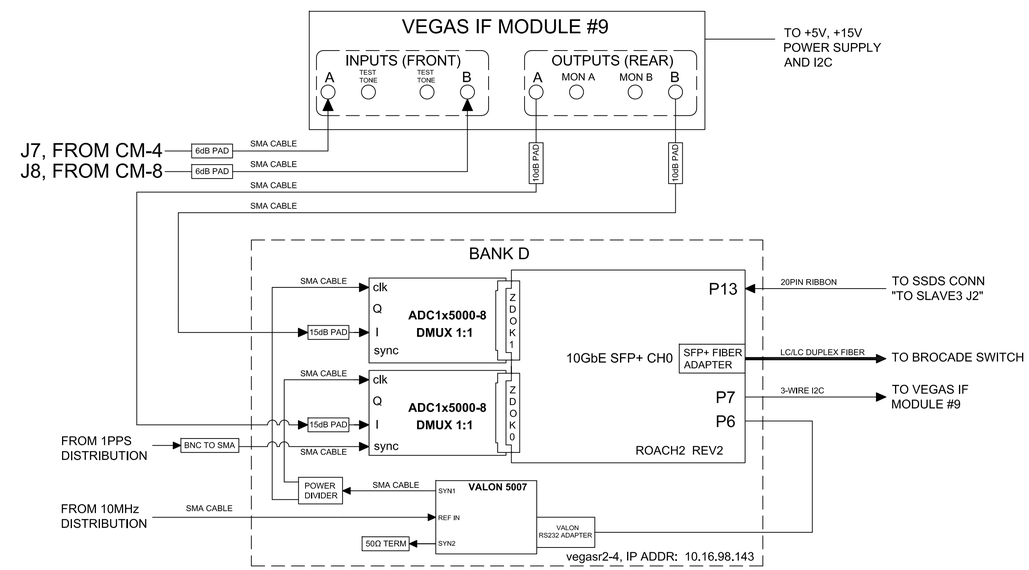

NOTES:
1. SFP+ FIBER ADAPTERS ARE FINISAR P/N FTLX8571D3BCL
2. POWER DIVIDERS ARE MINI-CIRCUITS P/N ZX10-2-20-S+
3. 6dB PADS ARE MINI-CIRCUITS P/N VAT-6+
4. CABLES TO & FROM IF MODULE: DWG35215S002, SH12
5. ADC CLK CABLES: DWG B35215S002, SH 11
6. 10MHZ CABLES: DWG B35215S002, SH 9
7. 1PPS CABLES: DWG B35215S002, SH 10
8. IF MODULE POWER & I2C CABLE: DWG B35215S002, SH 7, 8
9. 20PIN RIBBON CABLES: DWG B35215S002, SH 3, 4, 5
10. VALON RS232 CABLE: DWG B35215S002, SH 6

DRAFT!

NATIONAL RADIO ASTRONOMY OBSERVATORY
P.O. BOX 2, GREEN BANK, WEST VIRGINIA, 24944

PROJECT/TITLE	VEGAS BLOCK DIAGRAM		
DESIGNED	MANY	DRAWN	JMR
CHECKED			
SCALE		MATERIAL	
FINISH			
FILE	\ARCHIVE\35215\K003	SHEET	3 OF 4
REVISION	–		

TOLERANCES UNLESS OTHERWISE SPECIFIED
ANGULAR ±0°30'
FRACTIONAL ±1/64
2 PLACE DECIMAL ±.01
3 PLACE DECIMAL ±.005
DIMENSIONS ARE IN INCHES

DATE 12/18/12
DRAWING NO. B35215K003

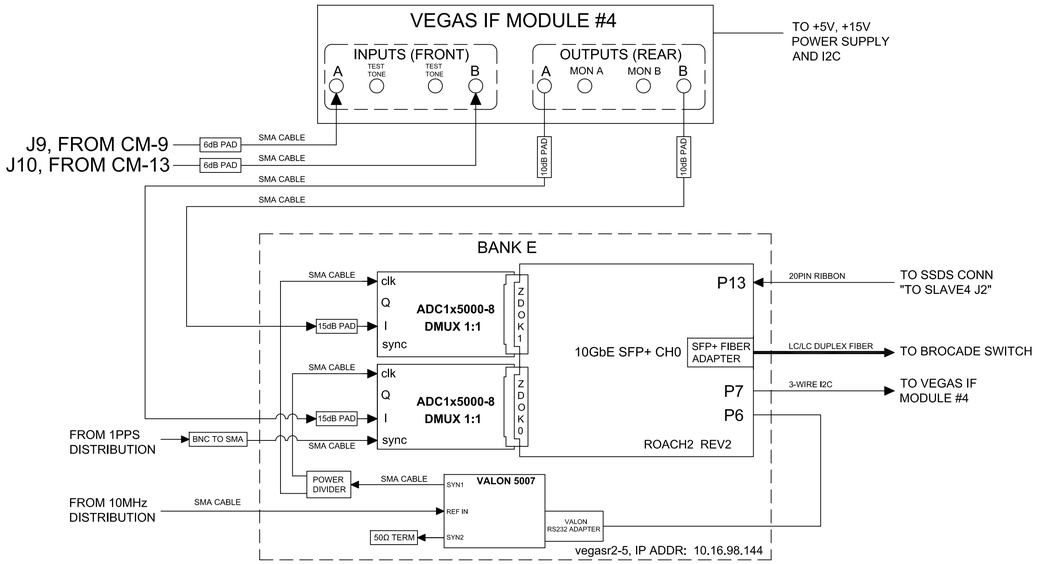

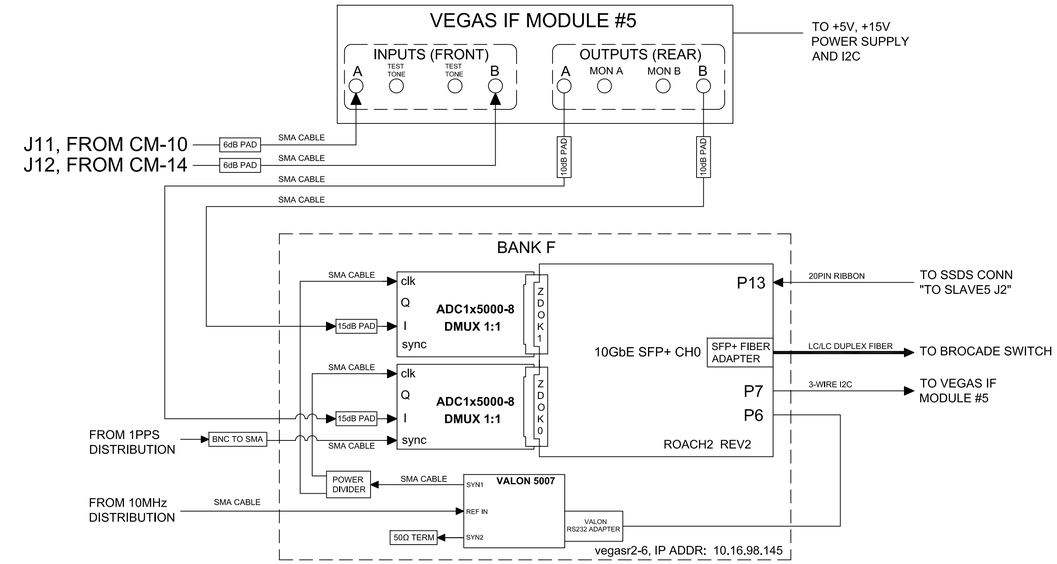

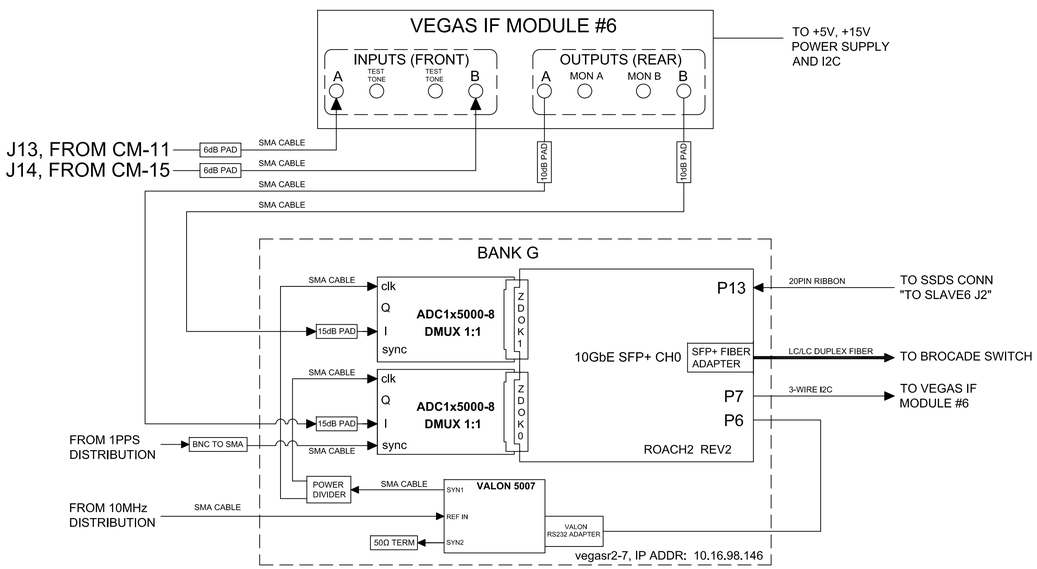

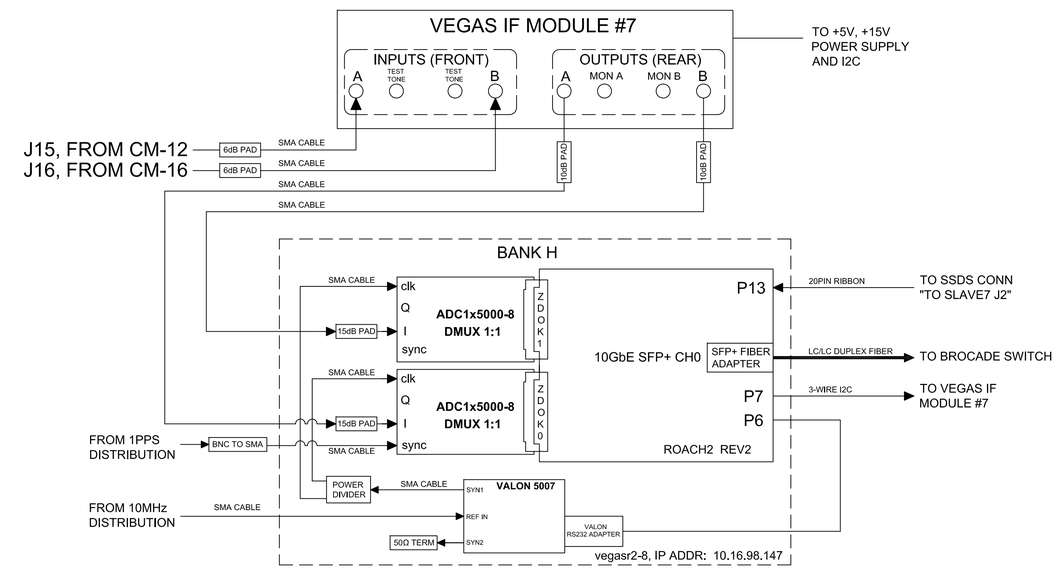

NOTES:
1. SFP+ FIBER ADAPTERS ARE FINISAR P/N FTLX8571D3BCL
2. POWER DIVIDERS ARE MINI-CIRCUITS P/N ZX10-2-20-S+
3. 6dB PADS ARE MINI-CIRCUITS P/N VAT-6+
4. CABLES TO & FROM IF MODULE: DWG35215S002, SH12
5. ADC CLK CABLES: DWG B35215S002, SH 11
6. 10MHZ CABLES: DWG B35215S002, SH 9
7. 1PPS CABLES: DWG B35215S002, SH 10
8. IF MODULE POWER & I2C CABLE: DWG B35215S002, SH 7, 8
9. 20PIN RIBBON CABLES: DWG B35215S002, SH 3, 4, 5
10. VALON RS232 CABLE: DWG B35215S002, SH 6

DRAFT!

NATIONAL RADIO ASTRONOMY OBSERVATORY
P.O. BOX 2, GREEN BANK, WEST VIRGINIA, 24944

PROJECT/TITLE	VEGAS BLOCK DIAGRAM		
DESIGNED	MANY	DRAWN	JMR
CHECKED			
SCALE		MATERIAL	
FINISH			
FILE	\ARCHIVE\35215\K003	SHEET	4 OF 4
REVISION	–		

TOLERANCES UNLESS OTHERWISE SPECIFIED
ANGULAR ±0°30'
FRACTIONAL ±1/64
2 PLACE DECIMAL ±.01
3 PLACE DECIMAL ±.005
DIMENSIONS ARE IN INCHES

DATE 12/18/12
DRAWING NO. B35215K003