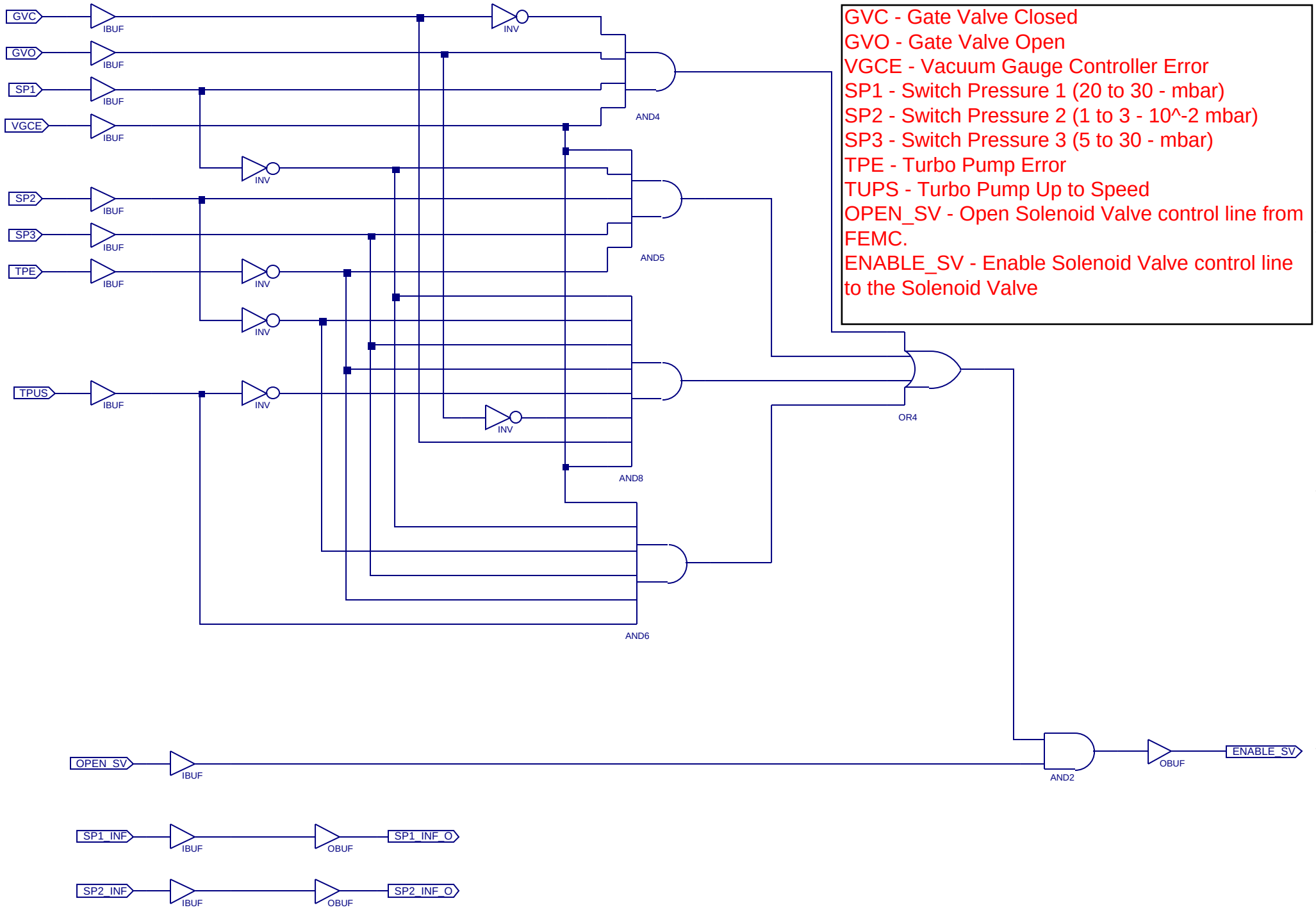
GVC - Gate Valve Closed
GVO - Gate Valve Open
VGCE - Vacuum Gauge Controller Error
SP1 - Switch Pressure 1 (20 to 30 - mbar)
SP2 - Switch Pressure 2 (1 to 3 - 10^-2 mbar)
SP3 - Switch Pressure 3 (5 to 30 - mbar)
TPE - Turbo Pump Error
TUPS - Turbo Pump Up to Speed
OPEN_SV - Open Solenoid Valve control line from FEMC.
ENABLE_SV - Enable Solenoid Valve control line to the Solenoid Valve
GVC
GVO
SP1
VGCE
SP2
SP3
TPE
TPUS
IBUF
INV
AND4
AND5
AND8
AND6
OR4
OPEN_SV
AND2
OBUF
ENABLE_SV
SP1_INF
SP1_INF_O
SP2_INF
SP2_INF_O